FIBER-WALK PANELS

- PPRODUCT DRAWINGS WILL BE PROVIDED BY FIBER-WALK FOR ALL PANELS PRIOR TO CONSTRUCITON

PANEL **#1**	-	300f400c10c	- QTY. **78**
PANEL **#2**	-	200f400c10c	- QTY. **4**
PANEL **#3**	-	150f400c10c	- QTY. **2**
PANEL **#4**	-	300f300c10c	- QTY. **2**
PANEL **#5**	-	150_359f400-28c10c	- QTY. **1**
PANEL **#6**	-	154_335f400-24c10c	- QTY. **1**
PANEL **#7**	-	079_220f400-21c10c	- QTY. **2**
CUSTOM WEDGE PIECES			- QTY. **11**

SHOWN AS HATCHED

HELICAL PILE NOTES:

1) ALL HELICAL PILES TO BE 4 1/2" DIAM. UNLESS OTHERWISE NOTED.
2) VERTICAL PILES SHOULD BE ABLE TO CARRY 30KN VERTICAL FORCE AND 5KN LATERAL FORCE IN ULS.
3) VERTICAL PILES SHALL BE TESTED FOR 60KN.
4) INCLINED PILES SHALL BE ABLE TO WITHSTAND 10KN UPLIFT IN ULS.
5) INCLINED PILES SHALL BE TESTED FOR 20KN.
6) IF THE DESIGNED BRACKET DOES NOT FIT THE HELICAL PILE, INFORM THE ENGINEER.
7) PLEASE SUBMIT HELICAL PILE SHOP DRAWINGS FOR REVIEW AND APPROVAL PRIOR TO CONSTRUCTION.

NOTES:

1) ALL OUTSIDE PILE CAPS ARE TO BE PILE CAP #1 UNLESS OTHERWISE NOTED.
2) ALL MIDDLE PILE CAPS ARE TO BE PILE CAP #2 UNLESS OTHERWISE NOTED.

LEGEND:

- PILE CAP #1 - ●
- PILE CAP #2 - ●
- PILE CAP #3 - ●

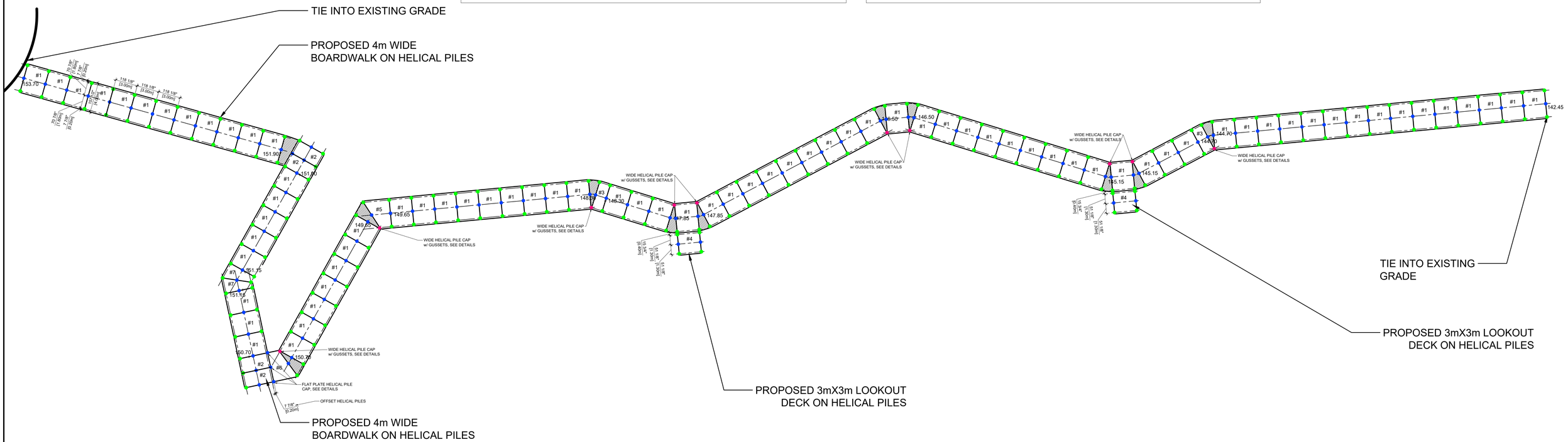

1 BOARDWALK HELICAL PILE LAYOUT

SCALE = N.T.S.

** THIS DRAWING TO BE READ IN CONJUNCTION WITH BOARDWALK LAYOUT CREATED BY WSP.

REVISIONS		
LTR:	DATE:	DESCRIPTION:
A	22-09-22	ISSUED FOR TENDER

TRUE NORTH:

CRITERIUM JANSEN ENGINEERS
25 FIRST STREET
ORANGEVILLE, ON, L9W 2C8
1-(888) 940-0571

ZOO BOARDWALK (A2)

BOARD-WALK LAYOUT

CLIENT: Connor Blaikie, WSP

DATE: 2022-07-10		DESIGN BY: MA	
DRAWN BY: PB		REVIEWED BY: MA	
PROJECT No.: 07-4502		DRAWING No.: A001	REV.: 0
SCALE: AS NOTED			

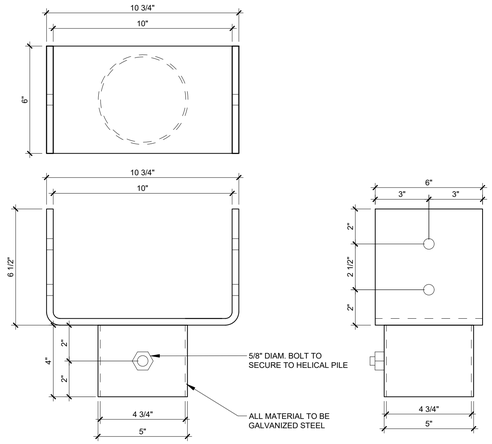

1 PILE CAP #1 - COMMON U-BRACKET

SCALE = 3" = 1'-0"

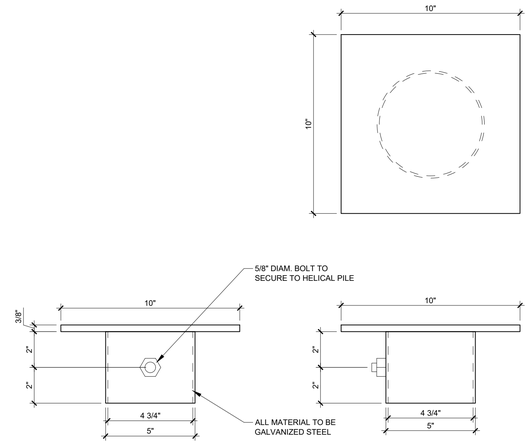

2 PILE CAP #2 - FLAT PLATE

SCALE = 3" = 1'-0"

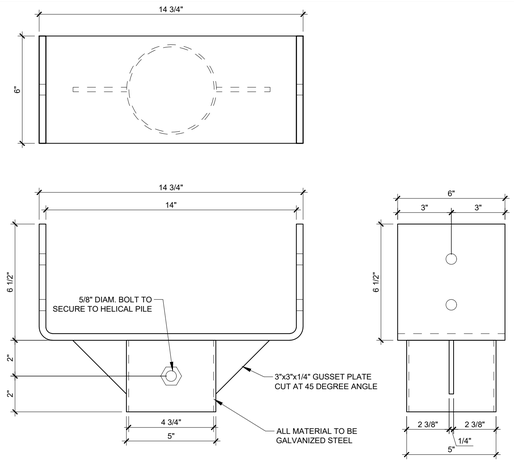

3 PILE CAP #3 - ELONGATED U-BRACKET

SCALE = 3" = 1'-0"

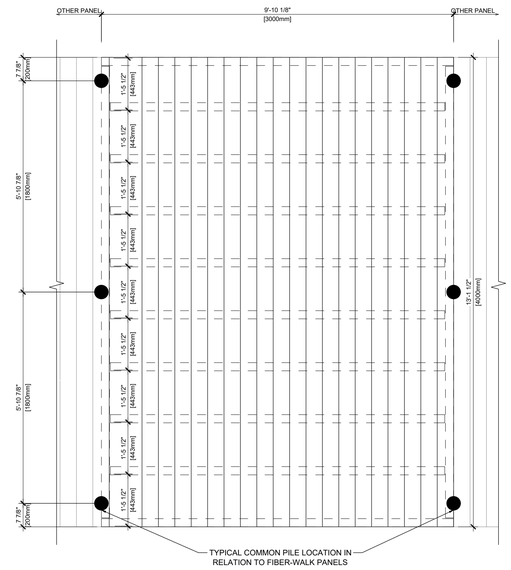

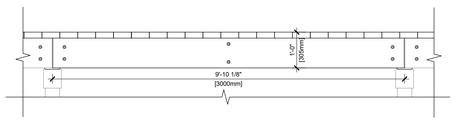

** PRODUCT DRAWINGS FOR INDIVIDUAL FIBER-WALK PANELS WILL BE PROVIDED PRIOR TO CONSTRUCTION

6 COMMON FIBER-WALK PANEL - 3.0m x 4.0m

SCALE = 1/2" = 1'-0"

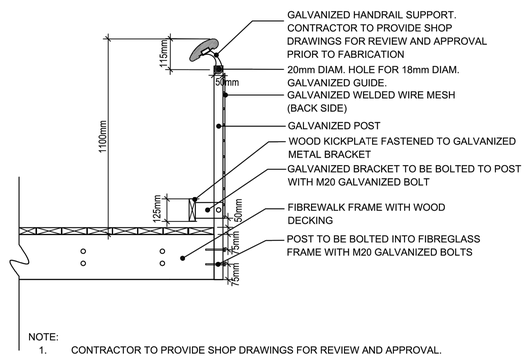

NOTE:
1. CONTRACTOR TO PROVIDE SHOP DRAWINGS FOR REVIEW AND APPROVAL.
2. SHOP DRAWINGS TO BE SIGNED BY P.ENG REGISTERED IN ONTARIO.

4 TYP. POST AND RAILING SECTION DETAIL

SCALE = N.T.S.

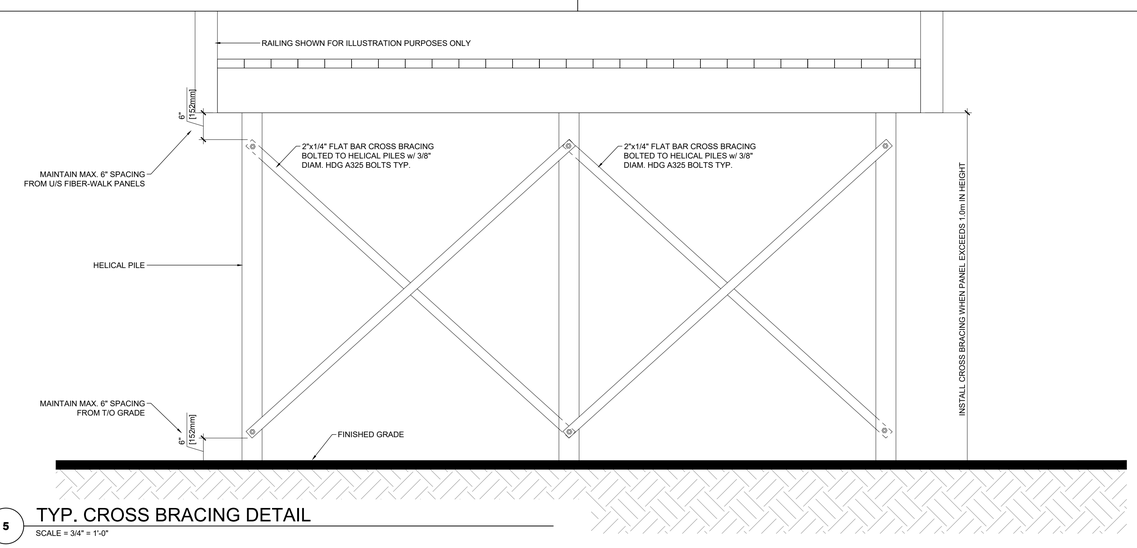

5 TYP. CROSS BRACING DETAIL

SCALE = 3/4" = 1'-0"

8 RESERVED

SCALE = N.T.S.

9 RESERVED

SCALE = N.T.S.

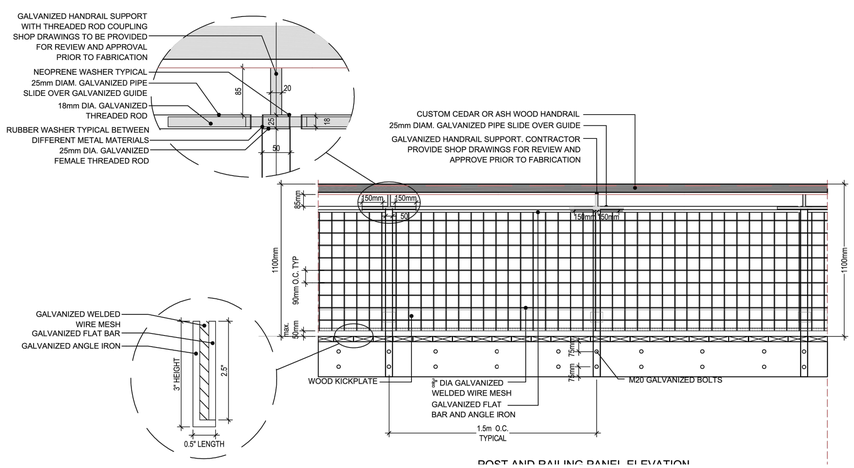

POST AND RAILING PANEL ELEVATION

7 TYP. POST AND RAILING ELEVATION

SCALE = N.T.S.

REVISIONS		
LTR:	DATE:	DESCRIPTION:
A	22-09-22	ISSUED FOR TENDER

TRUE NORTH:

CRITERIUM® JANSEN ENGINEERS
25 FIRST STREET
ORANGEVILLE, ON, L9W 2C8
1-(888) 940-0571

ZOO BOARDWALK (A2)

TYP. DETAILS

CLIENT: Connor Blaikie, WSP

DATE: 2022-07-10	DESIGN BY: MA		
DRAWN BY: PB	REVIEWED BY: MA		
PROJECT No.: 07-4502	DRAWING No.: A300	REV.: 0	
SCALE: AS NOTED			